MQiGT EVO

DOT V 1.0

USER MANUAL

Attach the
SN Code here

The SN Code of your scooter.
Please see P.6 for detailed information.

This owner's manual contains important safety, operational and maintenance information. Any person operating or riding as a passenger on your scooter should carefully read and fully understand the entire contents of this manual prior to riding the vehicle. For your safety, follow all safety warnings contained within the owner's manual and the labels applied to your scooter. If you have any questions, please ask your dealer for assistance.

⚠ WARNING California Proposition 65

Lithium-ion Batteries and/or products that contain Lithium-ion Batteries can expose you to chemicals including cobalt, lithium, nickel oxide, and nickel, which are known to the State of California to cause cancer and birth defects or other reproductive harm.

For more information go to www.P65Warnings.ca.gov.

⚠ WARNING

Lead-acid batteries, battery posts, terminals, and related accessories can expose you to chemicals including lead and lead compounds, which are known to the State of California to cause cancer and birth defects, or other reproductive harm.

For more information go to www.P65Warnings.ca.gov.

CONTENTS

General Notice 01
Precautions 02
Safety Notice 03
Downloading the APP 04
Installation Guide 05
Parts Info 07
Dashboard and Combination Switches 09
Operation Guide 15
Battery Use and Maintenance 20
DOs and DON'Ts while Riding 27
Reporting Safety Defects 29
Federal Communications Commission (FCC) Compliance Statement for USA 30
Maintenance and Repair 31
Storage Method 33
Troubleshooting List 35
Technical Parameters 42
Warranty information 45
Service and maintenance 47
Maintenance Record 49

General Notice

- Please read this User Manual carefully for proper operation before riding the scooter.
- For your safety, please check whether the parts are in good condition according to this User Manual before riding. Contact your dealer in time in case of any problems.
- Please follow the traffic laws. Slow down on slippery roads in bad weather to allow greater braking distance for your safety.
- Please pay attention to deep water. It may cause rusting or failure of the motor, battery or other parts if water level reaches wheel axle.
- Do not dismantle the scooter on your own. Please contact your dealer for replacement or purchase of original parts.
- Do not lend your MQi GT EVO to those who can't operate a scooter for others' safety and preventing unnecessary damage to your scooter.
- Please keep the User Manual properly.
- Due to constant improvement of product functions and change of design, your scooter may differ slightly from the one shown in this manual, Please refer to the actual product.
- For more product information or maintenance need,
  please visit our website: www.niu.com/en

Precautions

- Rider and Passenger
  MQi GT EVO is not designed for a ride of more than 2 persons.
- Road Conditions
  MQi GT EVO is not designed for off-road use.
- This User Manual should be deemed as a permanent document of MQi GT EVO. If this scooter is transferred to others, this User Manual should also be handed over to the new owner.
- Reproduction or reprint of any part of this User Manual is strictly prohibited.

⚠ **WARNING:** Failure to follow the instructions herein may lead to serious casualties.

⚠ **ATTENTION:** Failure to follow the instructions herein may lead to personal injury or scooter damage.

Safety Notice

- Using a safety helmet and protective goggles is strongly advised.
- You are advised to take proper training or exercise before using on open roads.
- Please follow the Operation Guide (P.15) to fully understand how to properly operate the scooter.
- It should be noted that the braking distance in bad weather will be much longer. Please avoid braking on paint markers, manhole covers, and oil stains to prevent slipping. Pay extra attention when riding through railway crossings, junctions, tunnels, and bridges. Slow down if road conditions are unclear.
- Do not use high beam indiscriminately. Continuous use of high beam may disturb the vision of other drivers and pedestrians.
- Do not use mobile phones or other electronic devices which may draw your attention while riding.
- Do not change the lane without signaling. Changing the lane at will is one of the major causes for accidents. When you need to change the lane, remember to switch on the Turn Signal Indicator first. Always check the vehicles approaching from behind before changing the lane.

Downloading the APP

Functions such as checking battery level, locating, and management can be implemented on the electric scooter through the app.

Step 1 Scan the QR code below to download the APP titled Niu E-Scooter.

Step 2 Run Setup after downloading and register.

Step 3 Please scan the QR code on the inside of cover page for app registration.

NOTE:

The mobile phone system is required to be at least Android 4.0 or iOS 8. Make sure that the mobile phone has been connected to the Internet when running the app (Wi-Fi / 2G / 3G / 4G).

Installation Guide

Step 1 Open the Accessories Box to take the tools.

Step 2 Install the rearview mirrors into the mounting holes on dashboard and turn it clockwise. The bolt shall be screwed in for more than 15 mm.

Step 3 Adjust the rearview mirror to an appropriate position and then tighten nuts on the rearview mirror with a spanner. Properly set the dust cover.

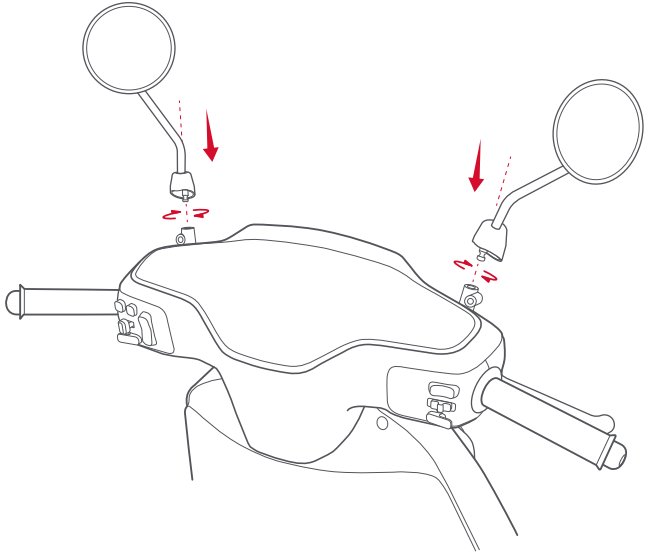

Step 1 Place the 12V battery in side the battery compartment under the floor board, with electrode terminals facing forward. Attach the red positive electrode terminal with red wire, and black positive electrode terminal with black wire.

Step 2 Mount the metal battery fixture to body with screws provided.

Step 3 Finally, mount the plastic cover to the floor board with screws provided, and the assembly is complete.

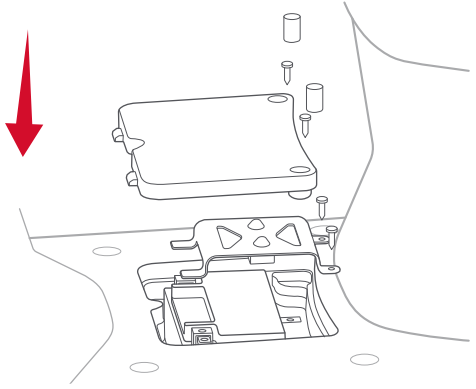

Parts Info

Part 567 Certification Labels

Manufactured By: JIANGSU NIU ELECTRIC TECHNOLOGY CO., LTD			
Type of Vehicle: Motorcycle			**Date:**
GVWR: 269 Kg(593 lbs)	**VIN:**		
GAWR	Dimension Tire	Dimension Rim	Cold Inflation Pressure
Front: 92 Kg(203 lbs) **Rear:** 177 Kg(390 lbs)	90/90-14 110/80-14	2.15*14 2.50*14	200 kPa(29PSI) 225 kPa(33PSI)
THIS VEHICLE CONFORMS TO ALL FEDERAL MOTOR VEHICLE SAFETY STANDARDS IN EFFECT ON THE DATE MANUFACTURE SHOWN ABOVE.			

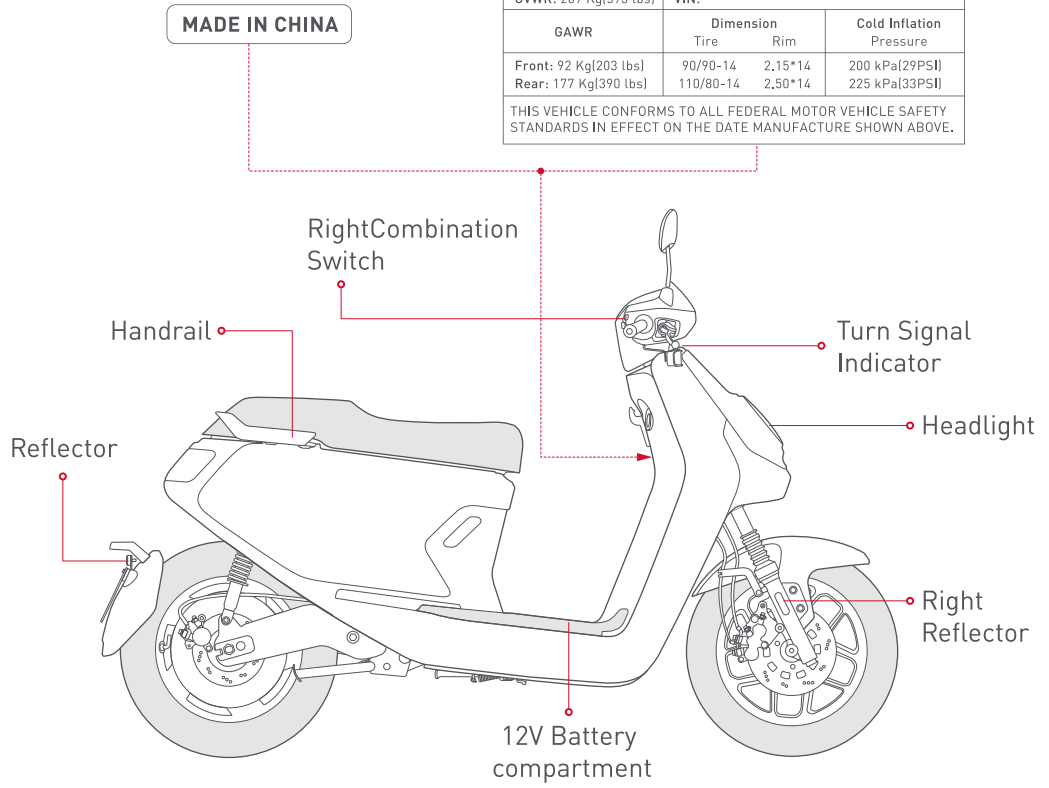

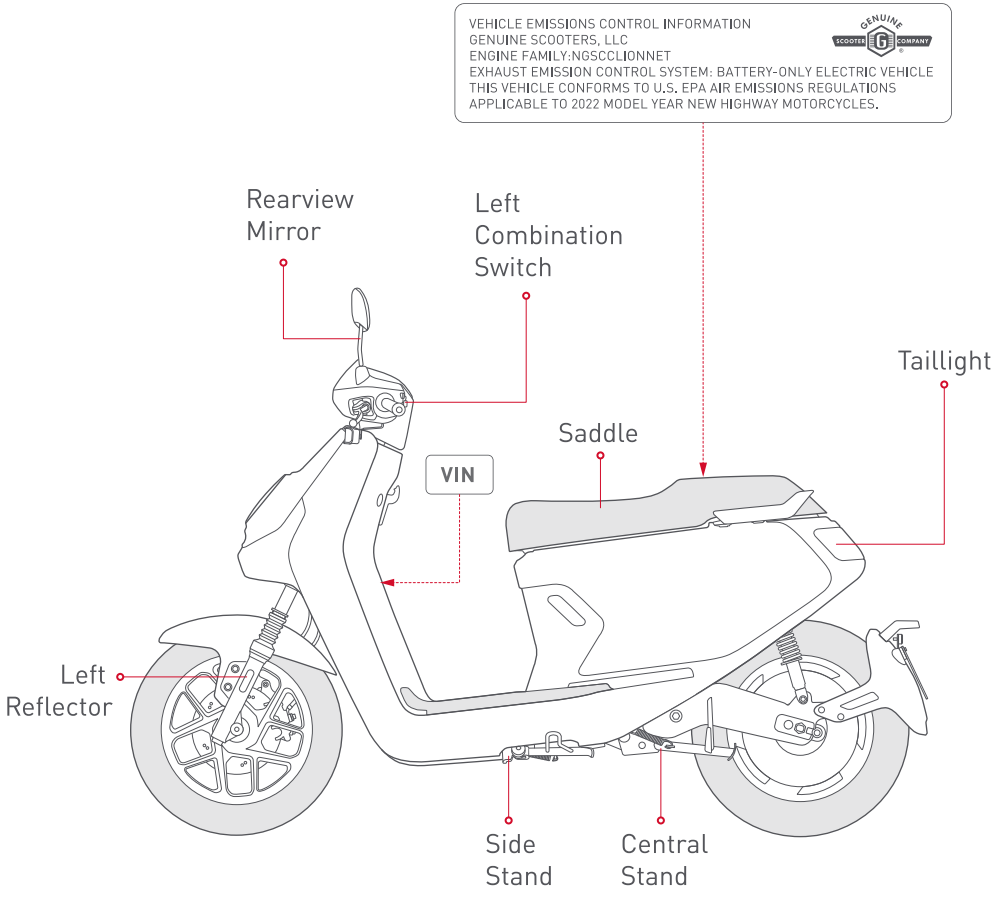

Dashboard and Combination Switches

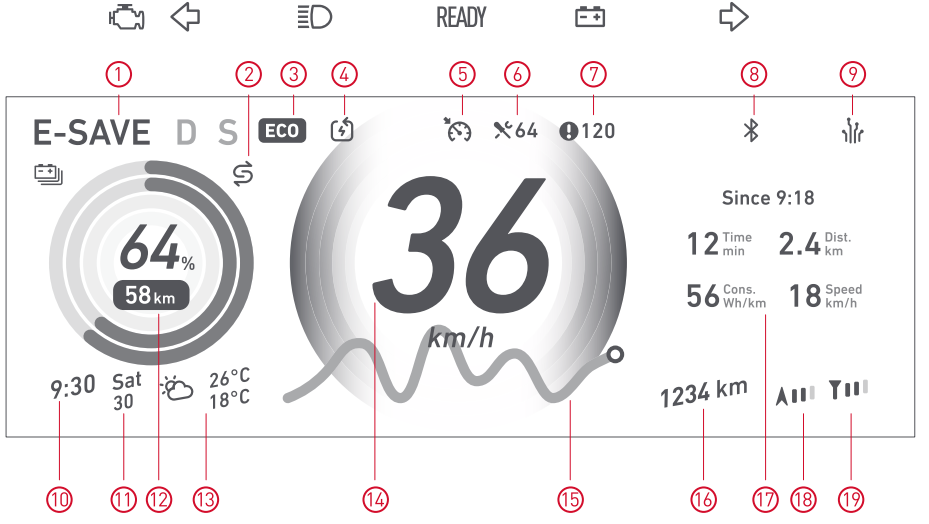

	OBD system		Right turn	READY	Ready
	Left turn		High beam		Low battery

①	Riding mode	Currently selected riding mode E-SAVE/DYNAMIC/SPORT;
②	Dual battery synchronization state	Displayed when two batteries have the same power;
③	Energy-saving state	Displayed at the time of efficient energy conversion (a speed of more than 3 km/h delivered per ampere of power output);
④	Power recovery	Displayed when power recovery is ongoing;
⑤	Cruise control	Displayed when the cruise control function is activated;
⑥	Maintenance rating	Displayed when the vehicle is not in good condition;
⑦	Error code	Displayed when the vehicle system reports an error;
⑧	Bluetooth state	Displayed when the vehicle is connected to Bluetooth;
⑨	Cloud service state	Displayed when the cloud service function is activated;
⑩	Clock;	
⑪	Week and date;	

⑫	Real-time power	Current battery level and battery bar (two battery bars respectively represent the levels of two batteries), and the estimated remaining mileage;
⑬	Air temperature, current weather conditions and temperature;	
⑭	Real-time speed;	
⑮	Energy consumption curve, curve of change in energy consumption during riding;	
⑯	Total mileage, total riding distance;	
⑰	Riding data, total riding time, mileage, average energy consumption, average speed ;	
⑱	Satellite positioning signal;	
⑲	Mobile network signal.	

Parking and Other

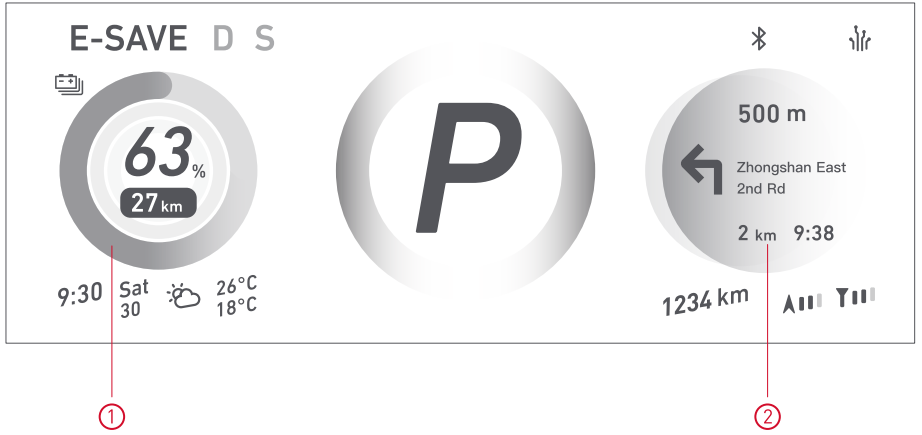

① Real-time power	Displaying a single battery bar when only a single battery is available;
② Navigation information	Enabled when connected to the meter through the APP of Niu Technologies.

Left-hand Combination Switch

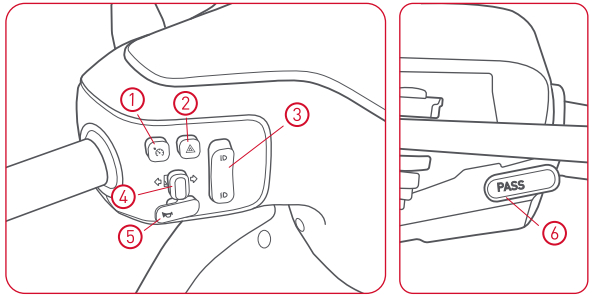

① Cruising Mode
② Hazard Light (flashing lights)
③ High/Low Beam
④ Turn Signal Indicator
⑤ Horn
⑥ Overtaking Light Button

Cruising Mode

Press the button to cruise at current speed.
Press again or brake to turn Cruising Mode off.

Hazard Light (flashing lights)

Both the left and right turn signal indicators will flash when the Hazard LIght button is pressed.

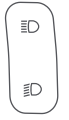

High/Low Beam

Push the button up to turn on the high beam;
push the button down to turn on the low beam.

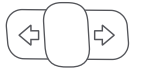

Turn Signal Indicator

Push the button left to turn on the left turn signal indicator;
Push the button right to turn on the right turn signal indicator.

Horn

Press the horn button to sound the horn, and release it to stop.

Overtaking Light Button

To signal overtaking with flashing light, the rider may press and release the Overtaking Light Button repeatedly.

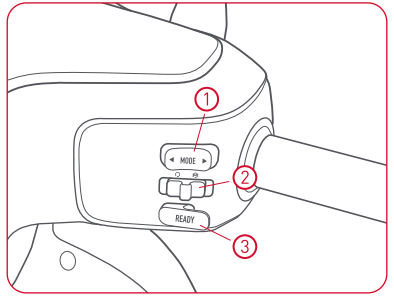

Right-hand Combination Switch

① Riding Mode

② Safety Switch

③ Start Button

Riding Mode

Press the left/right button to switch between riding modes.

Start Button

Press the Start button and the scooter will be ready to go.

1.Hold the Start button to turn on the vehicle;

2.Press the Start button and the scooter will be ready to go;

3.Double tap the Start button to open the seat compartment.

Safety Switch

Push the button to left to restore power and ride normally.Push the button to right to cut off the power system.If you press the button while riding,the scooter will start to coast (power will be cut off).

Operation Guide

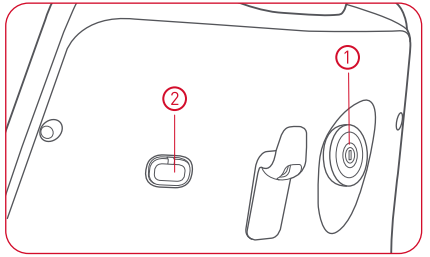

Front Storage Area

① Keyhole

② USB Port

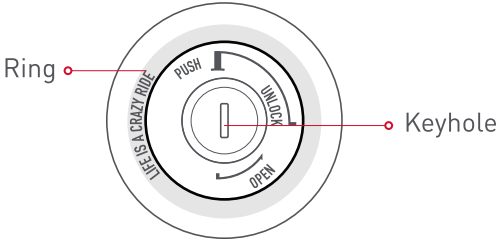

Anti-theft Lock

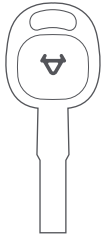

Key

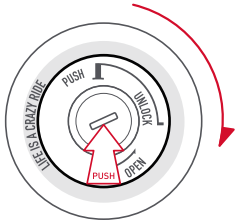

Unlocking the anti-theft lock

Insert the spare key into the emergency key hole, push it inward, and clockwise rotate to the “UNLOCK” position, to release the faucet lock.

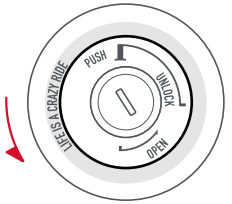

Opening the saddle

Insert the spare key into the emergency key hole, and counterclockwise rotate to the “OPEN” position, to open the battery compartment cover.

How to use the Remote Control

Spare key

When the vehicle cannot be powered on, spare key may be used to open the battery compartment/faucet lock.

Unlock Button

1.Press the button to disarm the alarm.
2.Hold the disarm button to open the seat compartment

Start Button

The scooter will be powered on/off when the Start button is pressed.

Lock Button

Press the Lock button to lock the scooter after riding.

Indicator Light

This will light up when any key of the remote control is pressed, indicating that the remote control is working normally.

⚠ **ATTENTION:** Make sure that the battery is correctly installed in the scooter before using the remote control, and that the straight distance between the remote control and the scooter is less than 50 m.

Follow this simple three-step procedure to enjoy a smooth ride.

Step 1 A. Press the Start button on the remote control. /Or Start the vehicle with your NIU APP.

OR

B. Carry the Bluetooth remote or a paired mobile phone with you, enter the vehicle's sensing range. Welcoming light around the key flashs sequentially. Hold the READY button on the vehicle.

Step 2 Fold away the side stand/central stand and make sure the safety switch is powered on. Press the Start button on the right-hand combination switch and the "READY" indicator on the dashboard will light up.

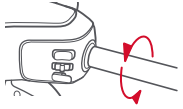

Step 3 Turn the throttle handle gently with your right hand to enjoy your first ride.

Check the scooter parts before riding. If there is any abnormality, repair it or seek profession repair service.

- Check the conditions of the power circuits, lighting circuits, etc;
- Check whether the front and rear brakes are working properly;
- Check the firmness of the steering handlebar and the front and rear wheels;
- Check tire pressure;
- Check the reflector for damage and make sure it is clean.

Locking the scooter

A. Press the Lock button on the remote control. /Or switch off the vehicle with your NIU APP.

OR

B. Hold the READY button on the vehicle. /Or Down the throttle and carry bluetooth remote or a paired mobile phone far away.

Turn the Steering handle to the left when power has been switched off to lock the Steering handle. Press the Lock Button on the Remote Controller within an effective distance to turn on the Alarm. The Turn Signal Indicators will stay on for 2 seconds after the scooter is properly locked.

Battery Use and Maintenance

Battery Level Indicator

- When the Indicator Button is pressed, the Indicator will light up to show the percentage of the battery. The indicator has 5 sections. Each presents 20% of the battery level.
- When charging, the indicator will flash to show the charging progress. They will stop
- flashing when the battery is fully charged.
  If all 5 sections flash, it means the battery has fault. Please contact your dealer for consultation.

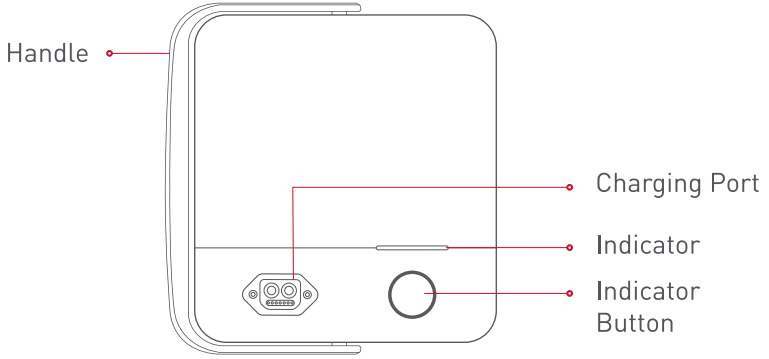

12V battery maintenance:

- 12V battery will consume electricity during long-term storage. It is recommended to connect the main battery for long-term storage to prevent draining the 12V battery.
- In the case of vehicle not being able to start due to the power shortage of the 12V battery, try charging the vehicle with the on-board socket to charge the 12V battery. Or ask your local dealer to service or change the battery if it does not charge.

Using Environment

In order to prevent possible leakage, overheat, smoking, fire or explosion, please follow these instructions:

- The battery should be used at the temperature of -10°C to 45°C.
- Do not expose to water, beverages or corrosive liquids.
- Keep away from heat source, open fire, inflammable and explosive gases and liquids.
- Please keep metal parts away from the battery compartment.

In case of undesirable odor, overheat or deformation of the battery, please disuse the battery immediately, keep away from the battery and contact your dealer.

⚠ **WARNING:** The MQi GT EVO battery is NOT a repairable part by the user. In case of battery fault, please contact your dealer. Users dismantling the battery may lead to leakage, overheat, smoking, fire or explosion. Do not attempt to open or repair the battery, as any attempt to do so will render the warranty invalid.

Charging Environment

The battery should be charged at the temperature of 0°C to 35°C. The charging time should not exceed 24 hours. Overcharging will shorten the battery life.

⚠ **ATTENTION:** Do not charge the battery below 0°C.

⚠ **WARNING:** Using non-original battery chargers may lead to leakage, overheat, smoking, fire or explosion.

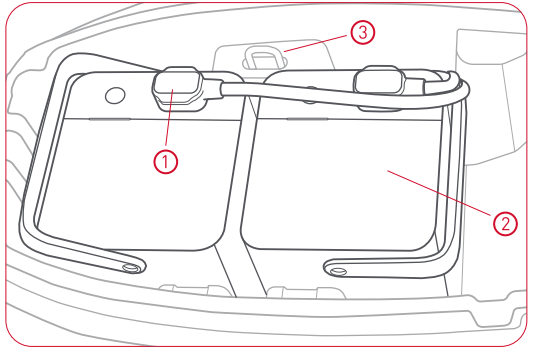

① Battery Connector/Charging Port

② Battery

③ Battery Lock

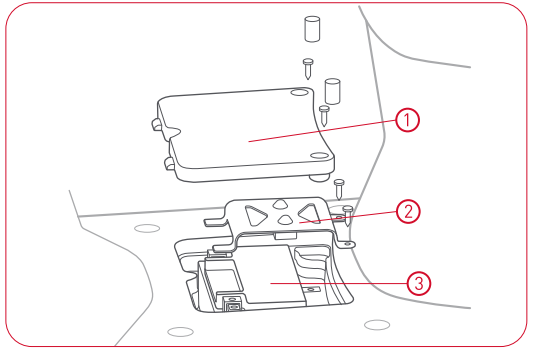

① Battery Cover

② 12V Battery fixture bracket

③ 12V Battery

Charging Methods

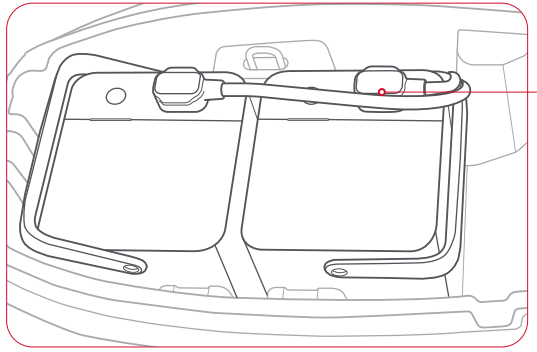

Charging Pot

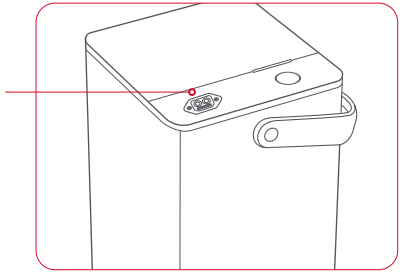

Charging on the Scooter

Open the saddle, open the cover of the connector, and plug the charger into the charging socket.

Charging the Battery

Remove the battery from the scooter. Connect the charger with battery and socket.

⚠ WARNING

- All operation should be strictly conform to the user manual. If not, result will be assumed by user.
- Must use original charger.
- Pay attention to the type of battery and applied voltage. Mixture use is forbidden.
- Charging should be in ventilated environment. DO NOT charge in closed space or under high temperature. DO NOT put charger into trunk or tail box while charging.
- While charging, connect battery with charger before connect with electric supply. After full charged, cut off the electric supply before cut off the battery plug.
- When the green light turns on, please cut off the power in time. Avoid long time connection between charger and AC power supply while not charging.
- While charging, if the signal light is abnormal, has different smell or the charger is over temperature, please stop charging immediately and check or change the charger in time.
- When using and storing the charger, please avoid foreign matter, especially water or other liquid in case of internal short circuit.
- DO NOT bring charger within scooter, if have to, please make sure of damping.
- DO NOT disassemble or change the parts in charger by yourself.

⚠ **ATTENTION**

- If the battery can not be fully charged after 12 hours, please stop charging and contact your dealer.
- To maximize the battery life, please keep the battery percentage within 20% to 80%.
- For storage, please keep the battery under 40°C to prevent irreversible capacity loss of the battery.
- MQi GT EVO battery will lose more capacity in lower temperature conditions. To be more pecific, the usable capacity at -10°C is 70%, 85% at 0°C and 100% at 25°C.
- The best battery capacity performance for storage is 50%. Storing battery with less than 10% or more than 90% over a long period of time will cause irreversible capacity loss to the battery.
- The battery needs to take out from the scooter for storage longer than one week. In this condition, please keep the battery at the temperature of 0°C to 20°C with capacity of 30%-70%. It's advised to have at least one cycle of charge and discharge every 2 months to minimize battery capacity loss during storage.
- If the battery failure is due to misuse or lack of proper maintenance as instructed, its warranty will be invalidated.
- Falling may cause uncontrollable internal damage to the battery and may cause leakage, overheat, smoking, fire or explosion.

DOs and DON'Ts while Riding

Before Riding

Please check the following details before riding.

Check Point	Description
Steering Handlebar	(1) Steadiness (2) Steering flexibility (3) No axial displacement or loosening
Braking	Braking lever has 5 to 9mm idle travel.
Tyres	(1) The air pressure range of the front tyre is 25 to 34 psi,the air pressure range of the rear tyre is 30 to 36 psi. (2) Proper tyre tread depth (3) No cracks or openings (4) Minimum load-capacity index: front 25, rear 48. (5) Minimum-speed category: J.
Battery	Adequate for planned distance to travel.
Lights	Check all the lights—High Beam, Low Beam, Brake Light, Turn Signal Indicator, etc.
Horn	Check whether the horn can work.

Braking Precautions

Adjust the scooter upright before applying brakes.

If the tyres are locked and the scooter loses steering ability resulting from excessive braking force, loosen the grip on the braking lever and the tyres will be working again and the scooter will be stabilized.

Try to maintain a 1:1 ratio of front and rear braking force on slippery roads.

Check the conditions of the power circuits, lighting circuits, etc;

⚠ **ATTENTION:** Inexperienced riders tend to use the rear brake only, which will accelerate the wear of the brake and result in a longer braking distance.

⚠ **WARNING:** Using the front brake or rear brake only is dangerous because of possible grip or control loss. Pay extra attention and use the brakes gently when riding on damp, slippery roads and around corners. Otherwise, riders will be exposed to great danger.

Reporting Safety Defects

Jiangsu Niu Electric Technology Co., Ltd

No. 387 ChangTing Road, West Taihu Science and Technology Industrial Park
ChangZhou City, Jiangsu Province, China

If you believe that your vehicle has a defect which could cause a crash or could cause injury or death, you should immediately inform the National Highway Traffic Safety Administration (NHTSA) in addition to notifying Jiangsu Niu Electric Technology Co., Ltd

If NHTSA receives similar complaints, it may open an investigation, and if it finds that a safety defect exists in a group of vehicles, it may order a recall and remedy campaign. However, NHTSA cannot become involved in individual problems between you, your dealer, or Jiangsu Niu Electric Technology Co., Ltd

To contact NHTSA, you may call the Vehicle Safety Hotline toll-free at 1-888-327-4236 (TTY: 1-800-424-9153); go to http://nhtsa.safecar.gov; or write to Administrator, NHTSA, 1200 New Jersey Avenue SE, Washington, DC 20590. You can also obtain other information about motor vehicle safety from http://www.safecar.gov

Federal Communications Commission (FCC) Compliance Statement for USA

Smart Central Controller
Model: V45
Contains FCC ID: XMR201605EC25A
Contains FCC ID: 2AQ95-C22H
Beijing Niu Technology Co., Ltd.

This device complies with part 15 of the FCC Rules.
Operation is subject to the following two conditions:
(1) This device may not cause harmful interference,and (2) this device must accept any interference,received, including interference that may cause undesired operation.

Maintenance and Repair

Users are advised to have the scooter checked and maintained on a regular basis, even for the scooters that are not used for a long time.

Regular Maintenance

Users are advised to have their scooters checked 2 months after purchased or with 500 km travelled distance. Overall check and maintenance is advised to be conducted every 6 months or 3000km thereafter.

Daily Maintenance

If any problem occurs during checks, please look through the Home Repair Instructions or send the scooter to the dealer's for checks and maintenance.

Scooter Washing

Please use neutral detergent and water to wash the scooter. Use soft cloth to wipe the scooter after washing to prevent scratching.

⚠ ATTENTION

If the scooter is frequently used in overload, high-speed, bumpy or up/downhill riding conditions, the maintenance cycle should be shortened.

For more guaranteed quality and longer service life, please use original parts, which are under normal warranty.

⚠ WARNING

If incapable of repair or adjustment on his/her own, the scooter owner is advised to send the scooter to the dealer's for maintenance and adjustment for the sake of safety.
Always choose a smooth surface road for repair and adjustment . If it's necessary to repair the scooter during a ride, please mind the traffic.

⚠ WARNING

Do not use pressure washer to wash the scooter, especially around the battery compartment. Do not flush the rear inner mudguard, where the charger, controller and other parts are installed behind. If the charging port on the scooter is wetted, please do not charge before the charger dries off. Contacting your dealer is recommended.

Storage Method

Short-term Storage

- Keep the scooter in flat, steady, well-ventilated and dry area.
- Charge the battery to 50% full before storage to maximize battery life.
- Avoid exposure under sunlight and rain to reduce damage or aging.

Long-term Storage

- Remember to have a cycle of charge and a discharge at least every 2 months and charge the battery to 50% full before storage to maximize battery life.
- Charge the battery to 100% full after long-term storage.
- Check all the parts carefully to make sure that there is no problem before riding it. If there's any problem, take the scooter to your dealer for maintenance or repair.

⚠ WARNING: Please take out the battery from the scooter when long-term storage.

Regular Maintenance Checklist	
Regular Safety and Performance Check	Brakes
	Lights
	Horn
	Electric Parts
	Tyres
Structural Check	Lubrication
	Wheel Bearing
	Vibration Damper
	Side Stand
	Steering Bearing
Major Parts	Battery
	Main Wiring Harness
	Control System

Troubleshooting List		
Malfunction Description	Causes	Troubleshooting
No output when switched on	1. Dead battery 2. Battery not connected 3. Alarm failure	1. Charge the battery. 2. Check if it's properly connected 3. Replace Alarm
Motor failure when turning the twist grip after switched on	1. Battery voltage is low 2. The power off switch is enabled when pulling the brake lever 3. The Parking Mode has not been turned off yet	1. Charge the battery. 2. Do not pull the brake lever when twisting the twist grip. 3. Check "Start the Scooter" section. Check if the side stand is on.
Battery charge failure	1. Not properly connected 2. Battery temperature is too high or too low	1. Check whether the plug is loosened. 2. Wait for it to achieve normal temperature.
Dropping speed or range	1. Low battery level 2. Under-inflation of tyres 3. Frequent braking and overload 4. Battery aging or normal capacity loss 5. Low battery capacity resulting from low temperature	1. Charge the battery and check if the plug is properly plugged in and whether the charger is damaged. 2. Check the tyre inflation every time. 3. Develop good riding habits. 4. Replace the battery. 5. Normal situaiton.

Troubleshooting List		
Malfunction Description	Causes	Troubleshooting
Sudden stop during a ride	Dead battery	Charge the battery.
	Identify the fault causes in reference to the meter panel fault codes.	

Fault Code List			
Fault Code	Meaning	Causes	Troubleshooting
10	FOC stop working	Motor stucked	Check if the motor is stucked.
11		Undervoltage or overvoltage	Check if the charger is intact.
12		Overcurrent	Contact your dealer if happens often.
13		Controller overheat	Park the bike in shade and wait for it to cool down.
30	Battery 1overcharge	Battery in overcharge protection	Turn on headlight to discharge.Check if the charger is broken or wrong type.

Fault Code List			
Fault Code	Meaning	Causes	Troubleshooting
31	Battery 1overcurrent	Battery in overcurrent protection	Stop charging and check if the charger is failed.
50	Battery 2overcharge	Battery in overcharge protection	Turn on headlight to discharge.Check if the charger is broken or wrong type.
51	Battery 2overcurrent	Battery in overcurrent protection	Stop charging and check if the charger is failed.
60	Communication Module failure	SIM card identification failure	Contact your dealer.
65		SN code are not written or Smart central controller serial code are not written	
67		SIM card unpaid or weak signal	
80	stop charging	Charger in overtemperature protection	Remove the charger, and wait it to cool down before charging again. If the problem persists, contact your dealer.
81		Charger in overvoltage protection	Unplug and plug the charger again. If the problem persists, contact your dealer
82		Charger in overcurrent protection	
99	Communication Harness failure	Smart Central Controller or Harness Assembly failure	Contact your dealer.
110	FOC failure	MOSFET failure	Contact your dealer.
		MOSFET driver failure	

111	FOC varification failure	Non-original Controller or communication failure	Restart the bike. Contact your dealer if it does not work.
120	Motor failure	Motor Hall Sensor failure	Contact your dealer.
		Motor cord disconnected	
123	Motor Houle malfunctioning	Motor Houle signal failure	Unlock and lock the electric switch lock again. If the problem persists, contact your dealer.
124	Motor overtemperature	Motor overtemperature is too high.	Stop riding and let the motor cool down.
130	Battery 1 overdischarge	Battery level is too low and the BMS is about to enter protection mode	Stop riding and charge the battery.
131	Battery 1 overcurrent	Battery is undervoltage or overvoltage	Check if the charger is failed.
132	Battery 1 overtemperature	Battery temperature is too high	Stop riding and park the bike in the shade to let the battery cool down.
133	Battery 1 belowtemperature	Battery temperature is too low	Charge the battery after it reaches the operating temperature range.
134	Battery Pack 1 not discharging	Excessive voltage difference	Contact your dealer.

135	Battery Pack 1 not discharging	Short-circuit between positive and negative electrodes of battery pack or external discharge current exceeding short circuit protection value due to external connection	Contact your dealer.
136	Battery Pack 1 not charging/discharging	Exposure to water due to structural reasons or water detection sensor false alarm	
138		Charging MOS or Discharging MOS damaged	
139		Battery failure	
140	Twist Grip failure	Twist Grip Hall Sensor failure	
141		Twist Grip Open Circuit Failure	
142		Twist Grip Short-circuit failure	
150	Battery 2 overdischarge	Battery level is too low and the BMS is about to enter protection mode	Stop riding and charge the battery.
151	Battery 2 overcurrent	Battery is undervoltage or overvoltage	Check if the charger is failed.
152	Battery 2 overtemperature	Battery temperature is too high	Stop riding and park the bike in the shade to let the battery cool down.
153	Battery 2 belowtemperature	Battery temperature is too low	Charge the battery after it reaches the operating temperature range.

154	Battery Pack 2 not discharging	Excessive voltage difference	Contact your dealer
155	Battery Pack 2 not discharging	Short-circuit between positive and negative electrodes of battery pack or external discharge current exceeding short circuit protection value due to external connection	Contact your dealer.
156	Battery Pack 2 not charging/discharging	Exposure to water due to structural reasons or water detection sensor false alarm	
158	Battery Pack 2 not charging/discharging	Charging MOS or Discharging MOS damaged	
159	Battery Pack 2 not charging/discharging	Battery failure	
161	Locked bike	The bike is remotely locked by the server.	
162	Anti-theft failure	Anti-theft failure	Restart the scooter or contact your dealer

183	stop charging	Charger in short circuit protection	Remove the charger and check the battery circuit Contact your dealer
190	FOC Communication failure	Can not receive Controller's data	Contact your dealer.
191	Battery communication failure	BMS can't return data or returned data is incorrect	Check the Connector is properly plugged. Contact your dealer if happens often.
192	Battery 2 communication exception	BMS can't return data or returned data is invalid	Check physical connection of communication circuit

Technical Parameters

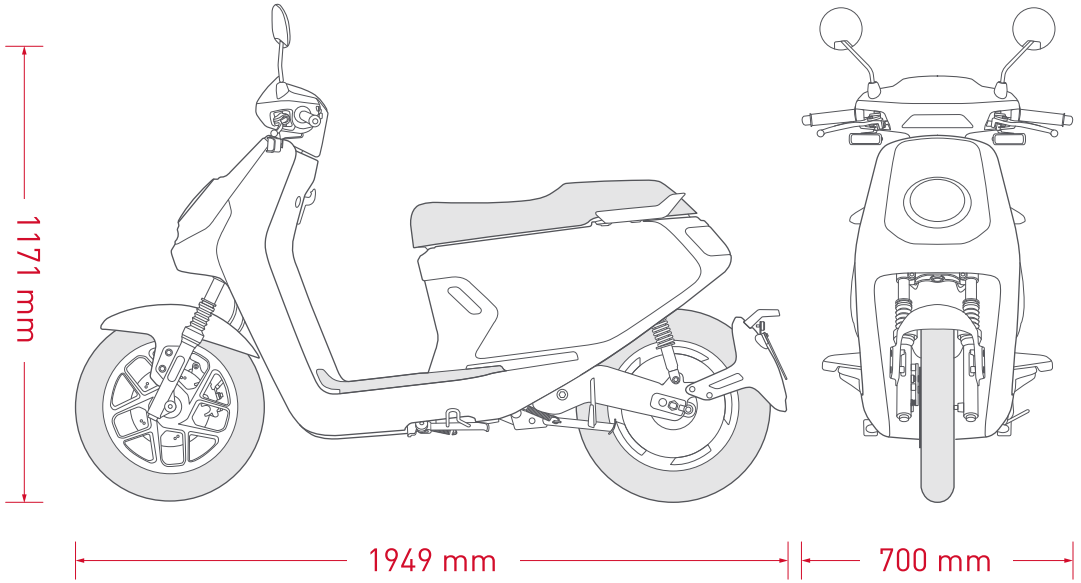

		MQi GT EVO
Features	Motor Rated Power	5000 W
	Battery Capacity	72 V 26 Ah*2
	Max.Speed	100 km/h
	Dimension	1949 x 700 x 1171 mm
	Product weight	128 kg
	Maximun Load	269 kg
	Number of seating positions	2
	Range	60-70 km
	Gradeability	Dynamic:~19°
Battery System	Voltage	72 V
	Standard Charging Current	11 A
	Maximun Discharging Current	130 A
Electrical System	Headlight/Turn/Indicator Taillight/Brake/Light Meter Panel	12 V LED
	Central Control Unit	12 V
	USB Charging	5 V / 1 A
Power System	Motor	Tailored Motor by Xinwei
	Motor Control Mode	FOC Vector Control
	FOC Controller Max. Current	120 A
Frame	Front/Rear Damper	Oil Damping Direct Acting Shock Absorber
	Front Tyre Specification	90/90-14 Rim: 2.15x14
	Rear Tyre Specification	110/80-14 Rim: 2.50x14

Frame	Brake System	Combined Braking System[CBS]
	Minimum Ground Clearance	180 mm
	Seat Heihgt	816 mm

Warranty information

Please carefully read the instruction manual of your vehicle beforeoperating it in order to make yourself familiar with its handling. We explicitly point out that the instruction, maintenance, and care instructions given in the operating manual have to be complied with in order to sustain your claim towards warranty. Only the strict compliance with customer specifications stated in the instruction manual ensures the prolonging of the natural life of your vehicle. Starting with the date of the invoice a limited warranty of 24 months is granted regarding the accuracy of the vehicle in terms of material and manufacturing according to latest standards. The legal warranty regulations will not be restricted by this limited guarantee. Maintenance work has to be exclusively done by authorized workshops entitled by us. Warranty in general is bound to the region of invoicing and can therefore only be carried out within the country the vehicle was bought. Damages that can be traced back to inappropriate usage, manipulation, or neglecting of the maintenance/care/operating instructions will not be covered by warranty.

Warranty can only be granted if occurring damages are immediately being reported to the seller or any other authorized workshop by the buyer. The warranty claim entitles the buyer to remedy deficiencies or to the reparation respectively the exchange of a damaged part in an authorized workshop after our approval. Compensation for remote or instantaneous damages cannot be granted. Vehicles in desolate condition will not be covered by warranty.

Repair works carried out on warranty do not enlarge the guarantee period. Only this document entitles you to call on warranty services. Therefore please make sure that you are delivered this fully filled in document by the seller and that he has registered your vehicle correctly in our system. Please also mind the following advices.

Body and panelling of the vehicle have to be kept free of dirt constantly. Do not use high pressure water blasters, strong jets of water, sharp and corrosive or other aggressive detergents which could harm surfaces and varnish permanently and foster corrosion. It is vital to use protecting cleansers. Please consult our dealers for the right and appropriate products.

Aluminium parts or other refined parts (chrome parts, anodized parts or other processed surfaces)have to be treated with appropriate maintenance products in order to prevent oxidation. Frame and metal parts are continuously to be treated with anticorrosive. A vehicle constantly parked outside has to be covered to avoid weathering and crack formations on seat and plastic parts. Vehicles used off-road and for racing purposes are excluded from warranty.

Service and maintenance

Important information

The date for the implementation of maintenance that limit is observed, which is reached first. That means driven kilometer or duration from initial startup.

The warranty can be granted only when the vehicle serviced in accordance with this plan and was not exposed to extraordinary stress.

⚠ **WARNING:** Only perform appropriate works which are intended for your vehicle.

Hydraulic lines should be replaced every 4 years.

From 8000 mi or the 2 years, the inspection should take place at least once a year or every 4000 mi.
The vehicle is continuously checked for rust. The vehicle owner is responsible for rust prevention.

On the following pages you will find the maintenance schedule and the service record.

		After the initial 600 mi	Every 1800 mi	Every 3600 mi	6000 mi or Every year	8000 mi or Every 2 years
COMPONENT	PERFORM					
General inspection	I	✓	✓	✓	✓	✓
Steering and controls	I / E	✓	✓	✓	✓	✓
Steering bearing	I / C / L				✓	✓
Electric System	I	✓	✓	✓	✓	✓
Lights and switches	I / E	✓	✓	✓	✓	✓
Circuit break switch	I	✓	✓	✓	✓	✓
Wheel bearing	I /E		✓	E	✓	E
Wheels, Rims	I	✓	✓	✓	✓	✓
Tyres	I*				✓	✓
Brake system generally	I / C /E	✓	✓	✓	✓	✓
Brake fluid				✓		
Telescopic fork	I	✓		✓		✓
Shock absorber rear	I	✓	✓	✓	✓	✓
Throttle	I / L		✓	✓	✓	✓
Main / Side stand	I / C /E		✓	✓	✓	✓

I... Control (Inspect) E... Exchange C... Clean L... Lubricate

*Check: Thread depth / Pressure

General information:

Regarding „control“: this component must be checked if the function is correct. Instructions such as „cleaning“ or „lubrication“ mean, that this work must be carried out additionally. If errors / defects are detected, they should be remedied.

Maintenance Record

Date		Mileage	
Notes:			
Dealer:			

Maintenance Record

Date		Mileage	
Notes:			
Dealer:			

Maintenance Record

Date		Mileage	
Notes:			
Dealer:			

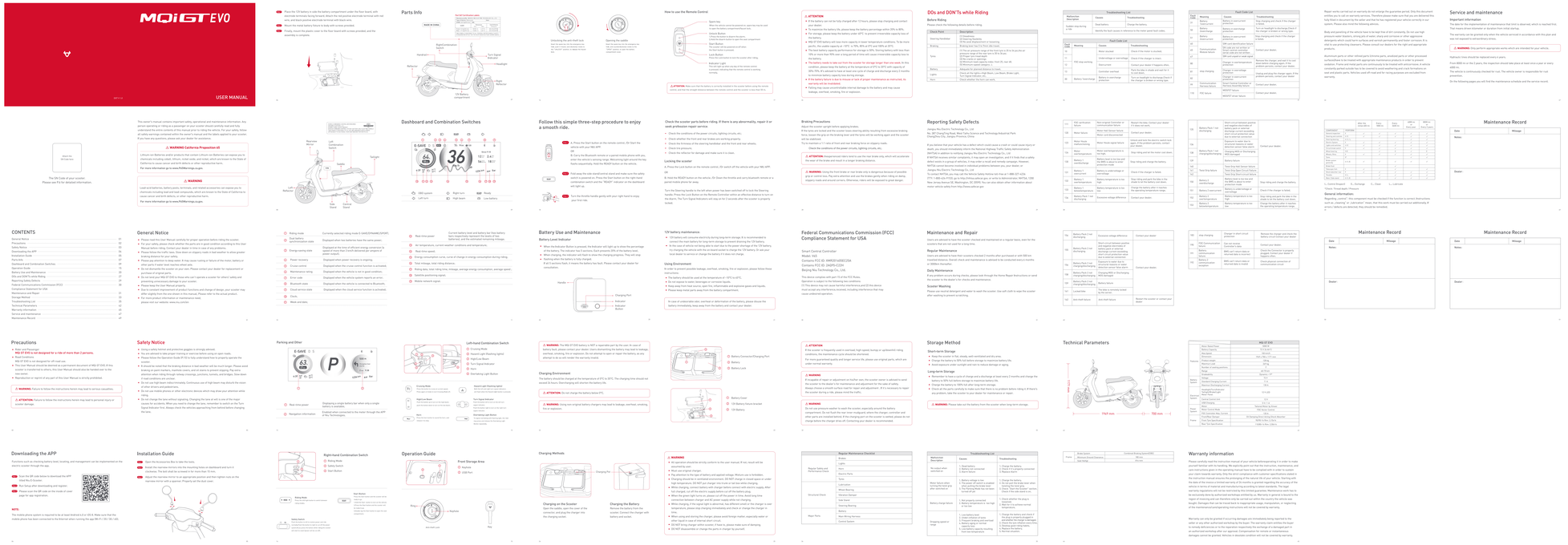

样品版本

技术说明：

1、材料(楞形\克重配比)：100g双胶纸

2、工艺: 正反面印刷 骑马钉

3、印刷颜色: 2专 PANTONE Cool Gray 11C PANTONE 186C

严禁更改任何图案和位置分布！

小牛电动 MGT EVO说明书（DOT） V1.0

物料编码

设计师

邱冠华

设计时间

2021.12.24

数量

1

更改备注

批准

尺寸

成型尺寸：170*140 mm

展开尺寸：

方向

图纸方向：印刷方向

展开尺寸：XX方向

公差（无特殊说明下）

纸箱类：±3 mm

标签类：±0.5 mm

说明书类：±1 mm

PE袋类：0~20 cm ±2 mm　20~50 cm ±3 mm　50~100cm ±5 mm

图示说明

裁切线

压线

反压线

间隔刀线 x/x mm

开槽

粘合区域

比例 1：1　单位 mm

niu